Alpha Place, Garth Road
Morden, Surrey
SM4 4LX England

(T): +44 208 337 2945
(E): sales@croxsons.com
WWW.CROXSONS.COM
Registered Office as above. Registered No: 71941

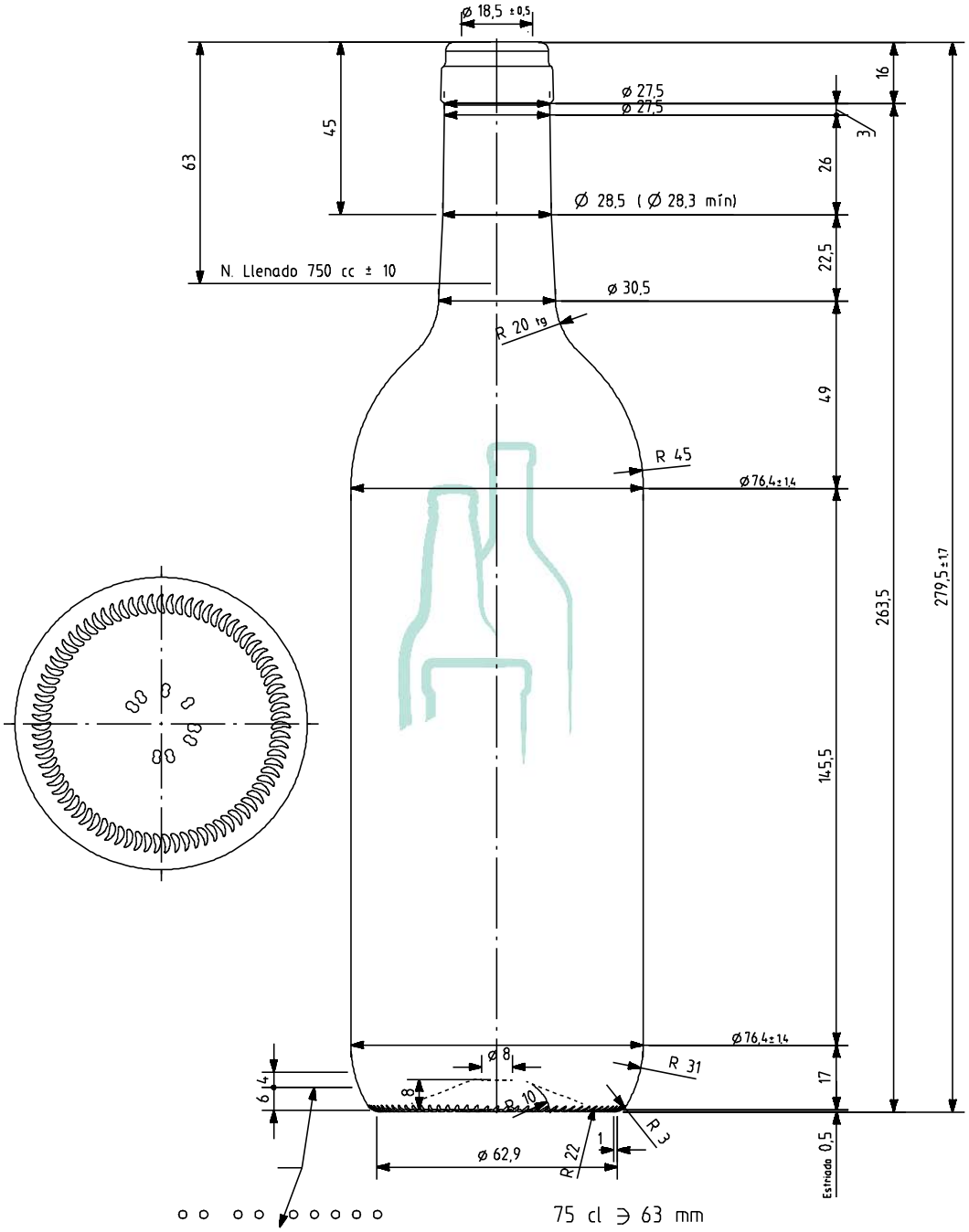

DESCRIPTION:	750ml Bordolesa Natura			ITEM CODE:	CRVD1253/242
COLOUR:	Flint / Emerald Green			WEIGHT:	340g
NOMINAL CAPACITY:	750ml	BRIMFULL CAPACITY:	770ml ±	CLOSURE:	Cork
HEIGHT:	279.5 ± 1.7mm	DIAMETER:	76.4 ± 1.4mm	FILL HEIGHT:	63mm
LABEL PANEL:	145.5mm	CARBONATION:	Bar	VACUITY:	ml ¦ %
PALLET HEIGHT:	1.200m	PALLET WEIGHT:	530Kg	UNITS PER PALLET:	1561
DRAWING CHECKED:		DATE CHECKED:	15.12.2011	DRAWING REF:	CRVD1253/242

All measurements are approximate unless tolerances stated then are in accordance with ISO9058:2008, E&OE excepted.
Clients should run trials and check physical samples prior to any full scale production.