Alpha Place, Garth Road
Morden, Surrey
SM4 4LX England

(T): +44 208 337 2945
(E): sales@croxsons.com
WWW.CROXSONS.COM
Registered Office as above. Registered No: 71941

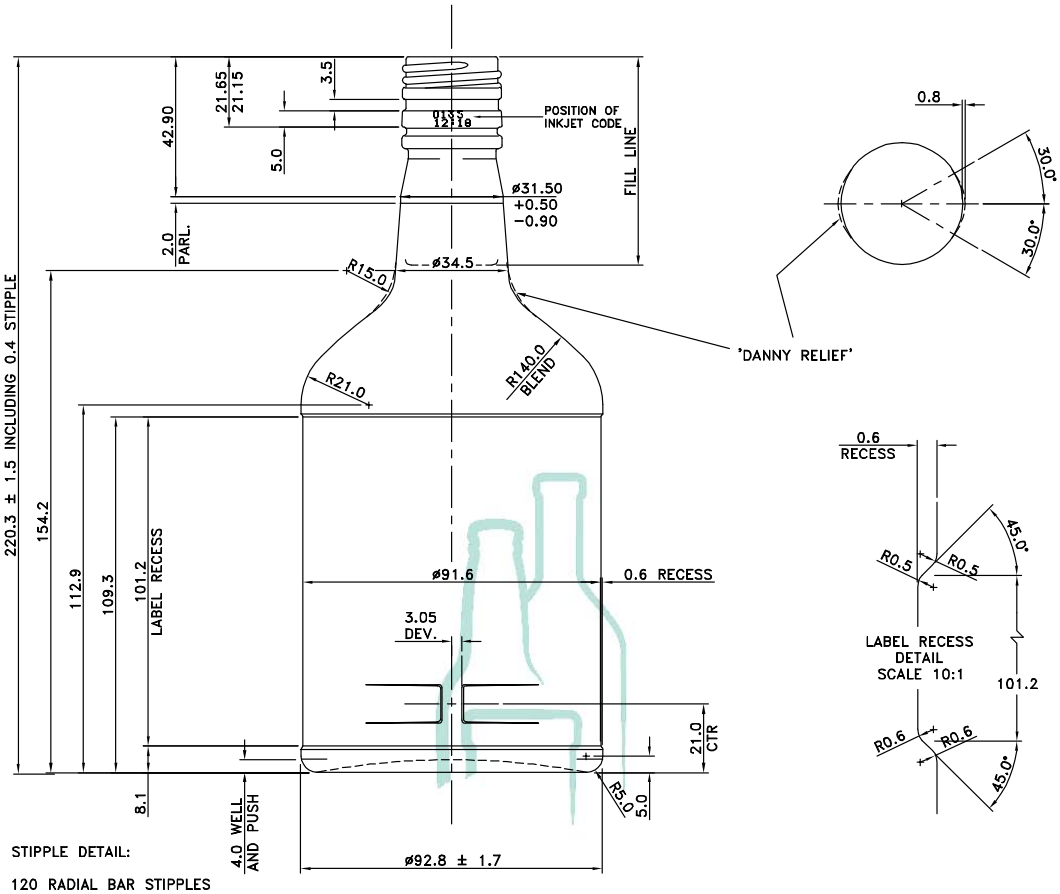

STIPPLE DETAIL:

120 RADIAL BAR STIPPLES 5.0 LONG x 1.4 WIDE, 0.4 DEEP ON BEARING SURFACE AS SHOWN

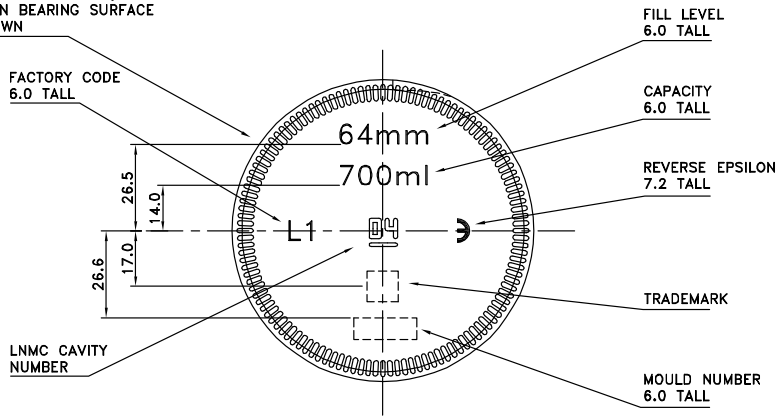

DESCRIPTION:	700ml Round Dump Liquor			ITEM CODE:	CRAG2088-7103
COLOUR:	Flint			WEIGHT:	530g
NOMINAL CAPACITY:	700ml	BRIMFULL CAPACITY:	724.5 ± 10ml	CLOSURE:	31.4 x 44mm Stelcap
HEIGHT:	220.3 ± 1.5mm	DIAMETER:	92.8 ± 1.7mm	FILL HEIGHT:	64.0mm
LABEL PANEL:	101.2mm	CARBONATION:	Bar	VACUITY:	3.5%
PALLET HEIGHT:	1.267m	PALLET WEIGHT:	413.6kg	UNITS PER PALLET:	720 – 5 Layers
DRAWING CHECKED:		DATE CHECKED:	21.11.2011	DRAWING REF:	CRAG2088-7103

All measurements are approximate unless tolerances stated, E&OE. Clients should run trials and check physical samples prior to any full scale production.