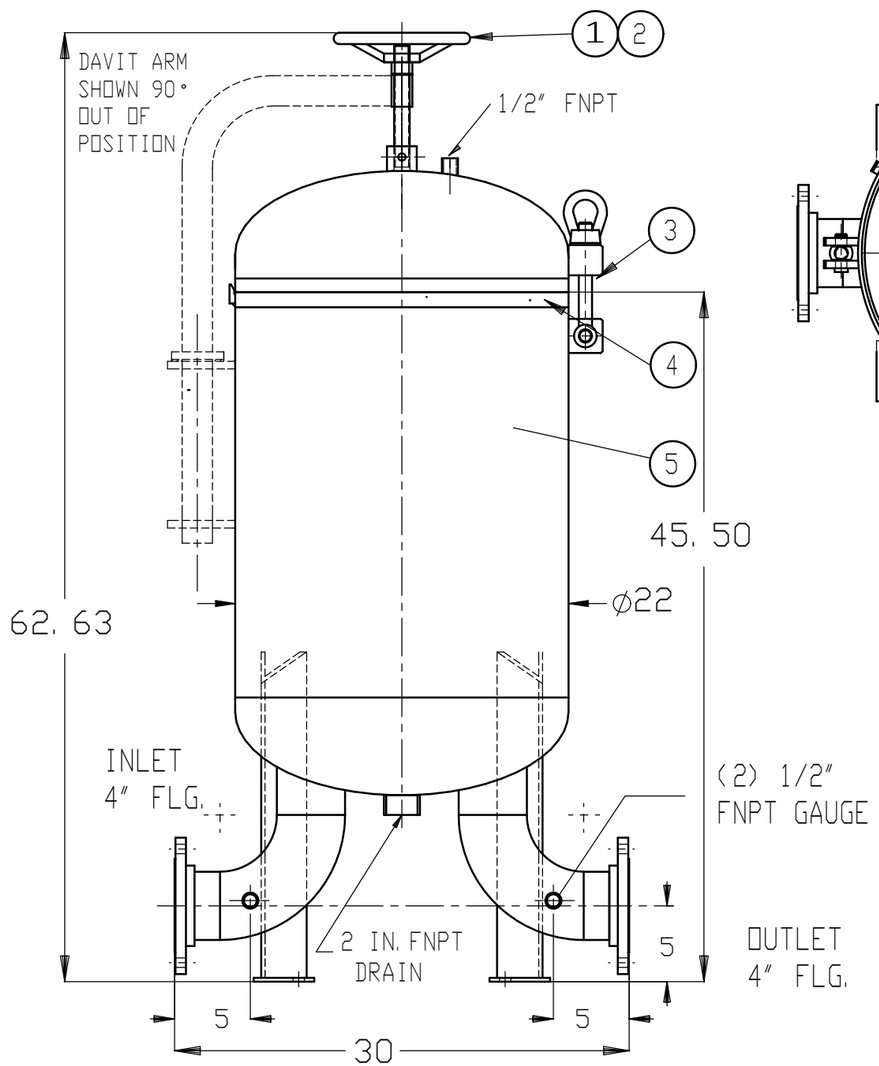

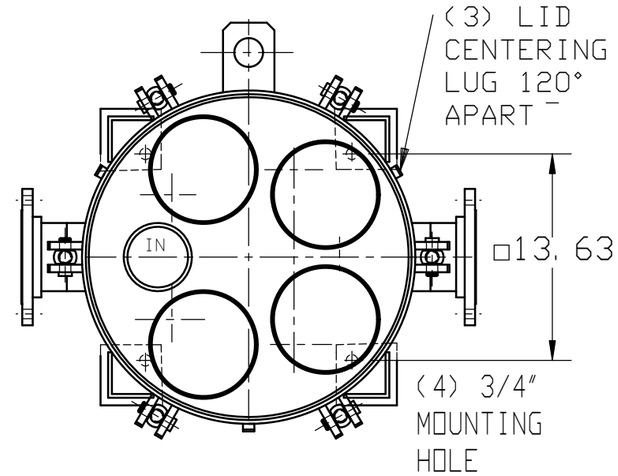

BILL OF MATERIALS

ITEM	DESCRIPTION	QTY
1	HAND WHEEL	1
2	THRUST BEARING	1
3	EYE BOLT ASSEMBLY	6
4	O-RING, 525 x 7	1
5	BASKET, CS SIZE 2	4

SHIPPING WEIGHT AND SIZE MAY DIFFER FROM STATED VALUES DUE TO PALLETIZING AND QUANTITY CONSIDERATIONS

VESSEL SIZE	BOXED WEIGHT (LBS)	BOX SIZE (INCHES)
SIZE 2	510	32 x 33 x 67

MODEL NUMBER: GMBE4304FC15EC
REFERENCE ENGINEERING DRAWING 21156

NOTES:
1. UNLESS TOLERANCES ARE INDICATED, ALL DIMENSIONS ARE REFERENCE.

PROPRIETARY AND CONFIDENTIAL
THE INFORMATION CONTAINED IN THIS DRAWING IS THE SOLE PROPERTY OF GLOBAL FILTER LLC. ANY REPRODUCTION IN PART OR AS A WHOLE WITHOUT THE WRITTEN PERMISSION OF GLOBAL FILTER LLC IS PROHIBITED.

REV	EC NUMBER
A	EC150318-01

EC HISTORY

MATERIAL: CARBON STEEL
FINISH: EPOXY COATED

	NAME	DATE
DRAWN BY	ME	3-19-15
ENG APPR.	EG	3-20-15

GLOBAL FILTER LLC

TITLE:
FLTR HSG ASSY, 4" FLG
GMBE430 CARBON STEEL

SIZE: B | DWG. NO.: CS111 | REV: A

SCALE: 1:10 | WEIGHT: | SHEET 1 OF 1