SANI-MATIC®

Clean-In-Place (CIP) Systems:
Validatable Cleaning of Process Lines, Tanks and Vessels.

One-Tank Wash & Rinse

Multi-Tank Wash & Rinse

Sani-Matic Clean-In-Place (CIP) Systems are engineered to your specific plant application and utility requirements for effective and efficient process equipment cleaning. Sani-Matic's CIP design and sizing ensure sufficient flow and appropriate pressure to thoroughly remove residue, rinse effectively, shorten cycle times, reduce operating costs and promote worker safety. The CIP Systems meet cGMP and ASME-BPE standards.

Sani-Matic Clean-In-Place (CIP) Systems are designed and supported to meet individual process requirements from programming to documentation and service.

Advantages

- **Complete Clean.** Proper CIP design and sizing ensure the required time, chemical, flow and temperature are in place to thoroughly remove residue, while reducing cycle time and operating costs.
- **Validatable.** Complete documentation available to comply with regulatory and validation requirements. Data acquisition and reporting capabilities are also available.
- **Programming and Controls.** Sani-Matic controls are designed to optimize cycle times and reduce chemical and water use. Ethernet communications interface with individual process control systems for an integrated solution.
- **Service.** Sani-Matic's dedicated service team is available for full technical support during the start-up and after installation.

Features

One-Tank Wash & Rinse

- Single-use source of cleaning solution and rinse water
- Low capital investment
- Portable or stationary design
- Once-through or recirculated
- Minimal space requirement

Multi-Tank Wash & Rinse

- Single-use source of cleaning solution and rinse water
- Stationary design
- Once-through or recirculated
- Decreased cycle time over single-tank design

One-Tank Schematic

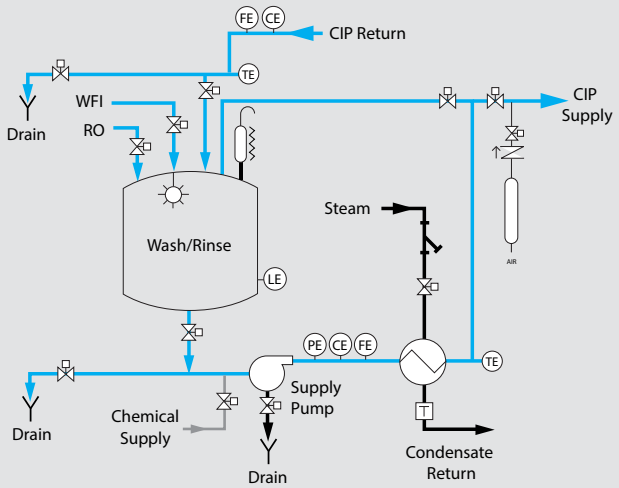

Multi-Tank Schematic

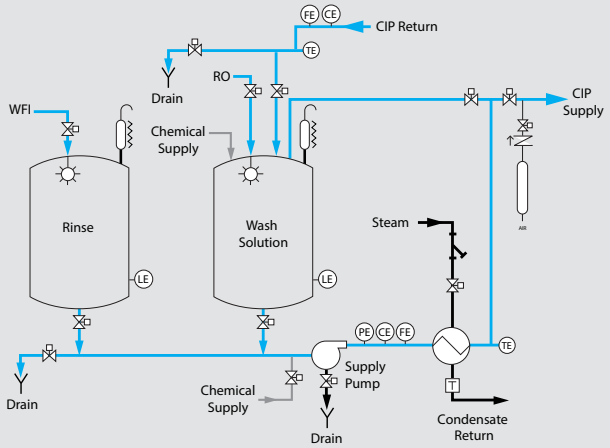

Controls

Sani-Matic has designed, manufactured and supported thousands of CIP control systems with its in-house programmers and UL authorized panel shop.

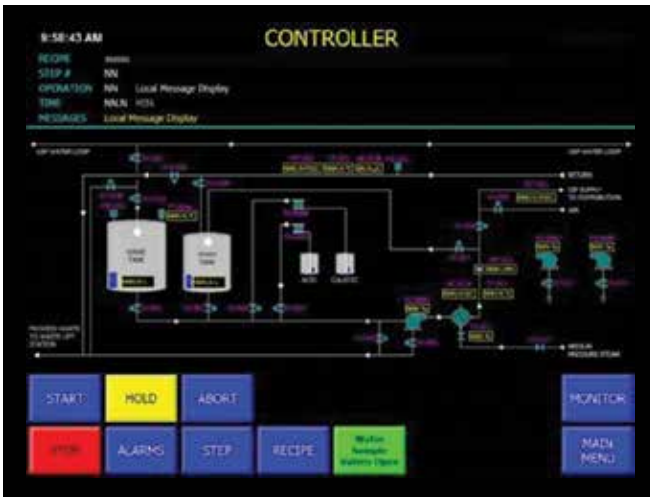

Advantages of Sani-Matic Controls

- **Experts.** The Sani-Matic programming and automation team specializes in cleaning applications and provides proven expertise and customized strategies.
- **Automation Ease & Flexibility.** Easy-to-understand Recipe Editor provides access to setpoints. Defined alarms reduce troubleshooting time.
- **Time, Water & Chemical Savings.** Recipe optimization shortens cycle time and minimizes water and chemical use.

TACT

Time • Action • Chemical • Temperature

We mix our industry-specific expertise with the perfect combination of Time, Action, Chemical and Temperature to deliver the best solution for your cleaning challenge.

Features

Standard

- Allen-Bradley CompactLogix
- Allen-Bradley PanelView HMI
- 40 customizable cleaning cycle programs
- Ethernet communication
- Wetted parts: 316L stainless steel
- UL listed, 304 stainless steel, NEMA 4X enclosure

Documentation

Standard

- Operation and maintenance manuals
- Recommended spare parts list
- Instrument list
- Instrumentation calibration procedures
- Performance data
- Material certificates
- Weld qualification and inspection records
- Inspection test results, reports and certificates
- ASME data
- Component catalog cut sheets
- As-built assembly drawings
- As-built process and instrumentation diagrams
- As-built electrical drawings
- PLC and HMI application files

Optional

- Functional Specifications (FS)
- Configuration Specifications (CS)
- Factory Acceptance Test (FAT)
- Site Acceptance Test (SAT)
- Installation and Operation Qualification (IQ/OQ)
- Traceability matrix
- ISA data sheets
- Digital weld video record (Borescope)
- Hydrostatic test certificate
- Cleaning and passivation certificate
- Riboflavin coverage test

Cleaning Confidence.

Repeatable results you can count on every time you clean your process parts and equipment.
That's Cleaning Confidence from Sani-Matic.

SANI-MATIC®

sanimatic.com

Sani-Matic, Inc. 1915 S. Stoughton Rd., Madison, WI 53716 (p) 800-356-3300 (f) 608-222-5348