MUELLER® SILO INSTALLATION AND OPERATION MANUAL

Part No. 9825887

Effective December 15, 1998
Revised March 12, 2008

MUELLER®
PROCESSING SYSTEMS AND EQUIPMENT

MUELLER®

SILO INSTALLATION AND OPERATION MANUAL

Table of Contents

SILO INSTALLATION AND OPERATION MANUAL

Table of Contents

SECTION 1.0 - ARRIVAL INSPECTION

1.1 Removal of Road Chemical Residue and Interior Cleaning

It is very important that the equipment be washed and rinsed as soon as possible to remove road salt and other chemical residue that may have been deposited on the equipment during transportation. The equipment may have been transported over roads containing residue from salt and other ice melting chemicals. The residue from these chemicals will rust stainless steel and carbon steel if not removed immediately. It is very important to wash and rinse the equipment as soon as possible to minimize the chemicals' contact time with the metal. Paul Mueller Company does not take responsibility for corrosion that results from these chemicals. Refer to Section 8.0 for detailed information.

The equipment interior surface is provided in broom-clean condition. Prior to placing the equipment into service the equipment may require cleaning to remove road film, adhesive film from the protective sheeting, abrasives dust, or other residues resulting from the manufacturing process and shipment. Storage without prior cleaning, particularly in hot weather conditions, may result in difficulty in removing any film or residue from the interior.

1.2 Arrival Inspection

Before the delivery driver leaves, inspect the equipment thoroughly for any damage or loss. Be certain to note comments about any damage or loss on the bill of lading when signing it to accept the shipment. Failure to note damage or loss on the bill of lading seriously compromises your likelihood of receiving full compensation for the loss from the delivering carrier. Shipments received on Paul Mueller Company trucks should be inspected and losses or damage should also be noted on the bill of lading, just as you would with commercial independent carriers.

In the event that concealed damage or loss is noticed after delivery, notify the carrier immediately upon discovery of the damage and request an immediate inspection of the damaged merchandise. The damaged merchandise should be held at the point the damage is discovered (with its crating and packing materials) until inspection is made by the carrier.

SECTION 2.0 - INSTALLATION

2.1 Suggested Unloading Methods

1. Furnish the rigger with the weight of the tank.

2. 5,000- to 20,000-gallon silos will arrive at the job site with the alcove positioned at 0°. Silos 30,000 to 60,000 gallons will arrive at job site with the alcove positioned at 90°. See Figure 1.

3. Rotate the tank at the job site using a sling so that the lifting lugs are horizontal. Rotate the alcove upward on 30,000- to 60,000-gallon silos.

4. With the taller of the two cranes, use a spreader bar to connect to the two horizontal lifting lugs. Do not lift silos from trailer if lifting lugs are not in a horizontal position. This may result in personal injury and/or serious tank damage. Refer to Figures 2 and 5.

Figure 1 - Arrival Orientation

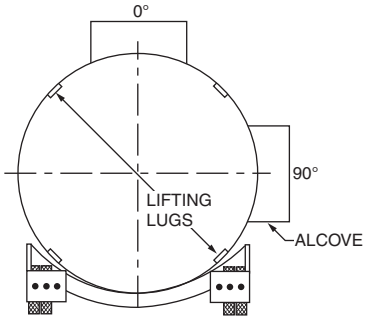

IMPORTANT: Before standing the tank upright, remove the top agitator shipping supports. Leave bottom agitator shipping supports in place to protect the agitator during erection of tank.

NOTE: Do not remove top supports until the tank is ready to be stood upright. Supports must remain in place whenever tank is moved.

Table 1 - Theoretical Tank Weights

Tank Size (gal)	Weight (lbs)
10,000	12,000
15,000	15,000
20,000	19,000
25,000	21,000
30,000	24,000
40,000	30,000
50,000	35,000
60,000	47,000

Figure 2 - Correct Lifting Method

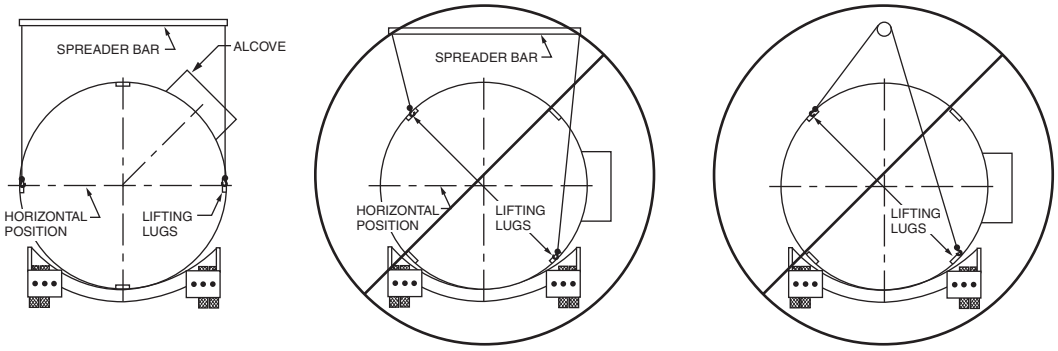

5. Using the second crane, connect a basketed cable around the center post on the base. See Figures 3 and 6.

6. Lift the tank from the trailer as shown in Figure 4 and Figure 7. Raise the top of the tank and lower the bottom of the tank until it is vertical. Relieve the tension in the cable connected to the base of the tank. Remove this cable without going under the tank.

Figure 3 - Connecting to the Center Post

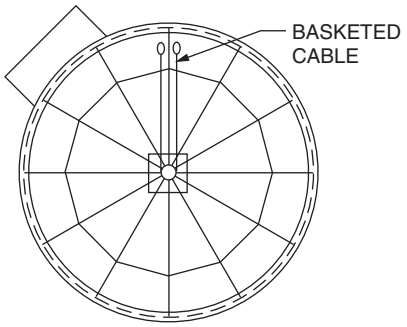

Figure 4 - Lifting the Silo from the Trailer

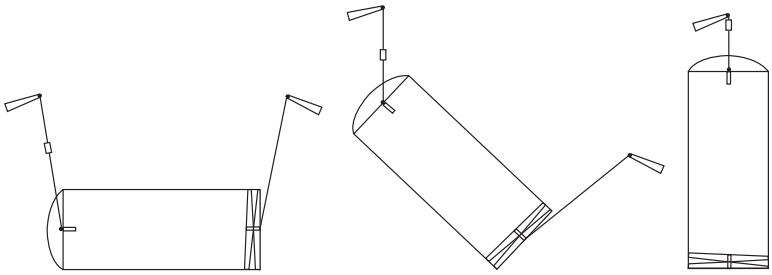

Figure 5 - Using a Spreader Bar to Lift the Silo from the Trailer

Figure 6 - Connecting to the Center Post with a Basketed Cable

Figure 7 - Lifting the Silo from the Trailer and Erecting

2.2 Suggested Anchorage Methods

Silo tanks should be anchored to a concrete or structural steel base. Refer to Figures 8 and 9 for anchorage details. Due to the varying soil and seismic conditions across the country, it is recommended that an architectural engineer be consulted to determine the thickness of the concrete pad or structural steel. Appropriate sized hold-down anchor bolts (not furnished with the tank) are to be securely anchored to the concrete pad by the customer. The tank base ring may also be welded to steel imbedded in the pad or to steel beams of a structural steel support structure. The concrete pad or structural steel must be level within ±1/8" from base ring to center leg location to adequately support the tank and its contents and to allow the alcove to be true to the inside plant wall. All parts and labor for anchoring the tank to the pad are the customer's responsibility. For alternate anchorage #1 consult an architectural engineer for the number of red-heads needed for seismic and wind loadings. For alternate anchorage #2, consult an architectural engineer for the size of I-beams needed and for the length and size of welds.

Do not exceed the maximum allowable loading on the base ring (see Table 1). Mueller standard silos are designed per UBC97 for seismic loading and ASCE 7-98 for wind loading.

Table 2 - Maximum Allowable Loading

Stock Tank Size (gal)	Maximum Load at Point A Alt 1 (KIPS/in)	Maximum Load at Edge of Base Ring Alt 2 (KIPS/in)
5,000 thru 25,000	1.116	.470
30,000	1.74	.735
40,000 ZN 1-3	1.74	.917
40,000 ZN 4	3.91	1.65
50,000 ZN 1-2	2.29	.965
50,000 ZN 3-4	4.73	1.855
60,000 ZN 1-2	2.29	.965
60,000 ZN 3-4	4.97	2.242

Figure 8 - Anchorage Details

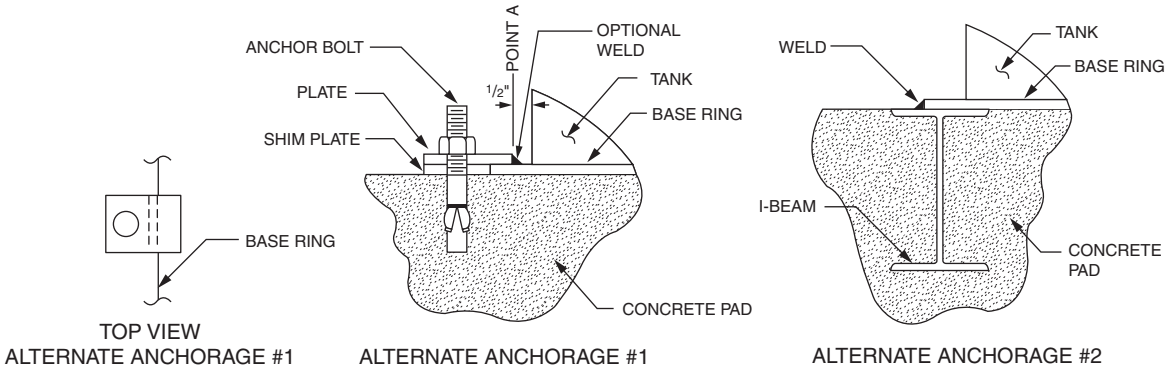

Figure 9 - Preparing to Anchor Silo

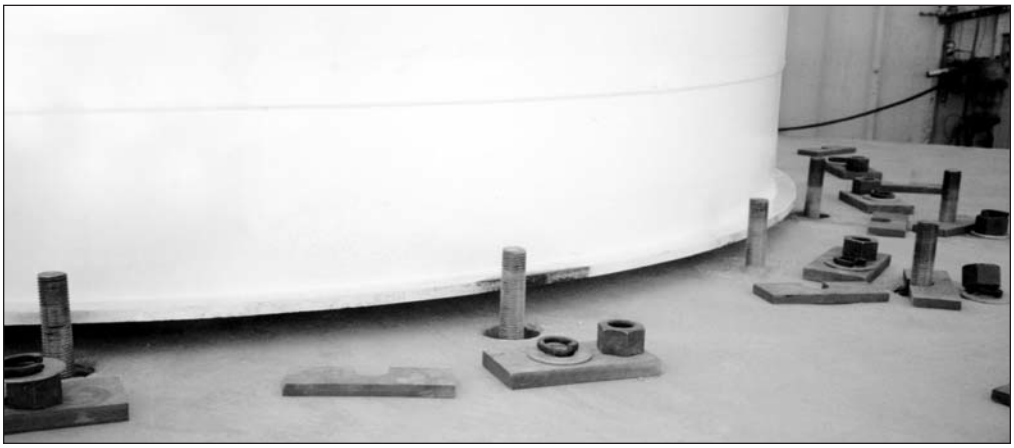

Figure 10 - Standard 20" Deep Alcove

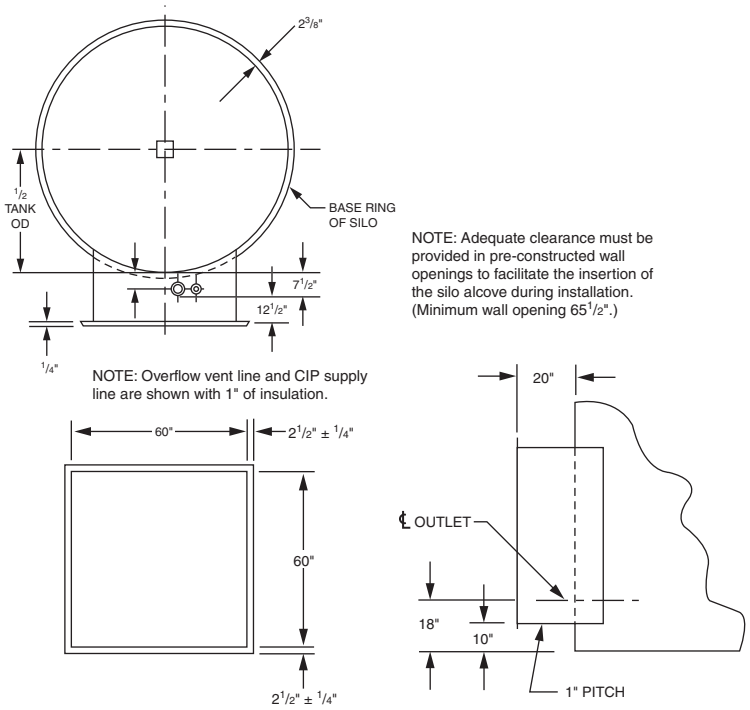

2.3 CIP and Vent System

CIP and vent lines must be protected against freezing. Our standard silos are furnished with Briskheat® self-regulating heating cables on the CIP and vent lines (8 watts/LF, 120-volt) and covered with Armstrong Armaflex® insulation. A pilot light is recommended to make sure that power is being supplied to the heating cable.

It is recommended that the silos be equipped with a high-level cut off on the level system to shut off the filling pump as it is being filled to its rated capacity. A secondary high-level probe through the over flow/vent line is also suggested in the event of a failure with the level system.

IMPORTANT: The vent line is not an overflow. If the tank is over filled so that liquid is overflowing from the vent line, it cannot provide venting and the liquid head created in the vent line will pull a vacuum and collapse the tank. The CIP line can provide minimal venting, if it is open and not obstructed.

SECTION 3.0 - MANWAY COVER

3.1 Installation of Manway Gasket, Part No. 9827340

1. Groove (channel) of the gasket must be placed over and enclose the 3/4" lip of manway cover. See Figure 11.

2. Gasket must be stretched tight around circumference of cover. Do not use loose fitting or damaged gaskets.

3.2 Closure and Sealing of Manway Cover and Gasket

1. The alignment (face) plate of cover must be inside the collar all the way around, with the gasket making contact against the sealing surface of the tank wall or head.

2. Should the cover assembly need adjustment (either up or down), proceed as follows:

   a) Loosen the set screw in the lower hinge lug.

   b) Use a crescent wrench to turn the nylon eccentric bushing to position the cover correctly and then retighten the set screw.

   c) Make certain the cover and gasket are seated properly.

3. Position clamp arm and tighten wing nut—hand tighten only. Excessive force will damage gasket, cover, and component parts.

4. Failure to perform the preceding steps could cause major product loss.

5. Should product leak around the cover during filling of the vessel, stop the process and recheck for proper sealing of cover and gasket. If this procedure is not successful, contact the Processing Equipment Service Department at Paul Mueller Company.

Figure 11 - Installation of Manway Gasket

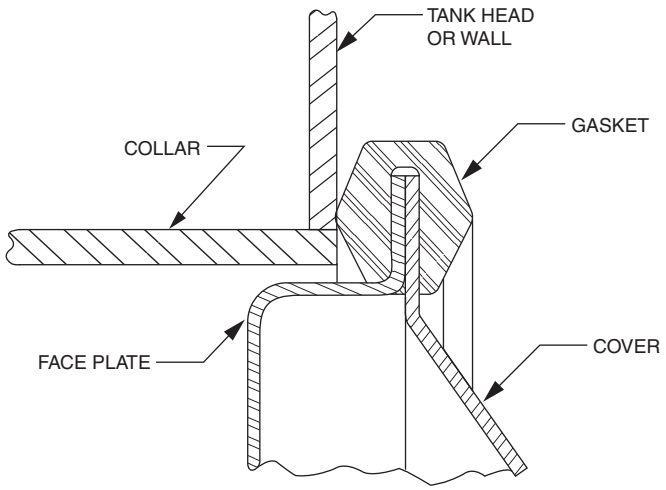

3.3 Manway Parts List

ITEM	PART NO.	DESCRIPTION
1	9901373	HINGE, UPPER, 304 S/S
2	9901374	HINGE, LOWER, 304 S/S
3	3200095	SET SCREW, 1/4"-20NC, 3/8" LONG SOCKET HEAD, W/ CUT POINT, 18-8 S/S
4	9829325	COVER ASSEMBLY WITH 316 S/S
5	9900362	WARNING PLATE
6	9822911	ARM ASSEMBLY, 304 S/S
7	9901383	BUSHING, 6/6 NYLON
8	9901409	HINGE PIN, 304 S/S
9	9901081	PIN ASSEMBLY, 304 S/S
10	9900846	COLLET, 304 S/S
11	9901371	EYEBOLT, 304 S/S
12	9901379	CLAMP, 304 S/S
13	9900085	WASHER, DELRIN, 150
14	9902250	WING NUT, NITRONIC, 60
15	9900847	ROLL PIN, 400 S/S
16	9827340	GASKET, 15.5 X 20.5, WHITE NEOPRENE
17	9829324	FERRULE, L14AM7, 1.5", 316L S/S
18	9825875	ASEPTIC SAMPLING ASSEMBLY (OPTION 1)
19	9825877	COCK SAMPLE ASSEMBLY WITH TRI-CLAMP (OPTION 2)

Figure 12 - MC-1 Manway

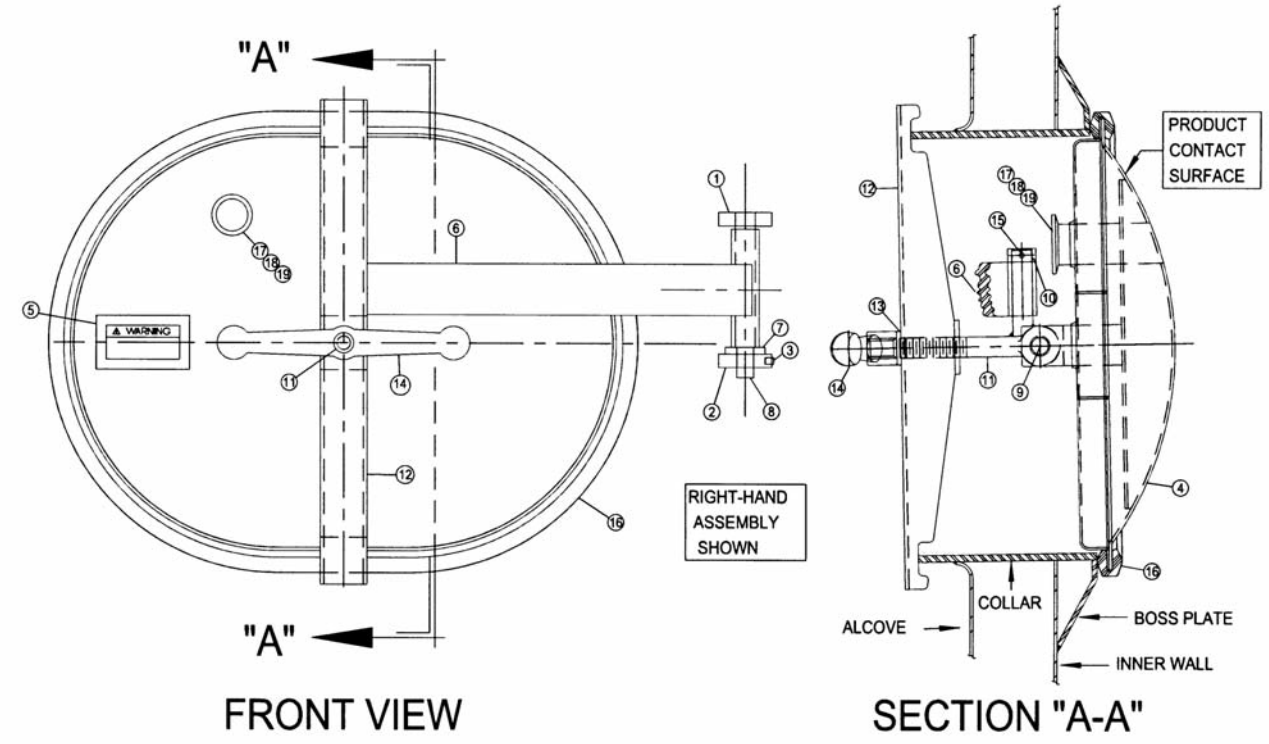

SECTION 4.0 - CIP AND VENT SYSTEMS

4.1 Caution

IMPORTANT: Failure to perform the following two steps will cause the silo to collapse:

1. CIP and vent lines **MUST** be free from obstruction while draining product.

2. Manway door **MUST** be open during CIP process.

4.2 Procedure to Prepare Silo for CIP

The Mueller silo is CIP-able, but the manway gasket, vent screens, and sample valve should be removed for COP.

1. Open manway door and swing out to allow inisertion of CIP door. The manway door should be manually cleaned.

2. Remove vent screens from overflow and CIP lines located at top of alcove. (These vents should be in place during filling and processing of product in silo.)

3. Install CIP door and gasket, then attach CIP attachment assembly device to overflow and CIP lines.

Figure 13 - Agitator Cleaning Detail

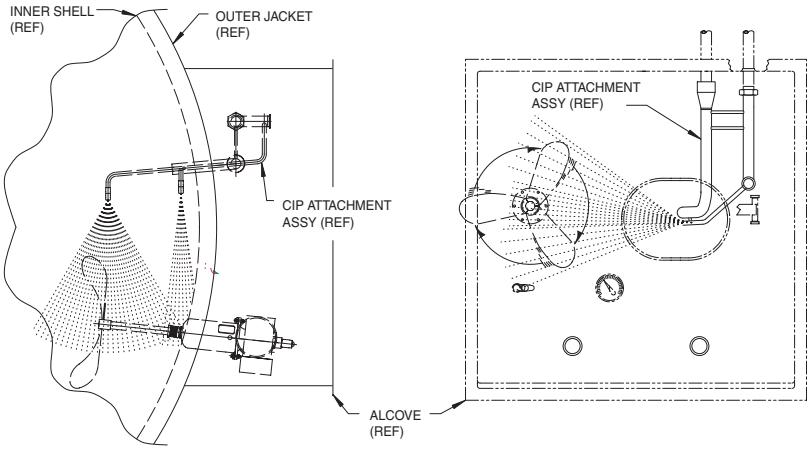

4. A screen or strainer device should be installed on the CIP solution supply line to prevent foreign objects from being drawn into and obstructing the spray dish assembly located in top head of silo.

5. The required flow rate is 90 gpm at 6 psi measured at the CIP spray dish assembly.

6. The rinse CIP cycle solution shall be tempered not to cause excessive vacuum inside the vessel.

4.3 Mueller CIP Spray Dish Assembly

The Mueller CIP spray dish assembly and delivery tube located in the center of the top head has a dual purpose. It cleans the silo by distributing solutions across the top head, down the side wall, and across the bottom head. It also serves as a vent when the silo is not in CIP mode. The spray device is designed so that it will properly clean all product contact surface of the silo, except for the agitator propeller, seal assembly, manway door, and manway gasket. The CIP attachment assembly has spray nozzles to clean the agitator prop and seal. The agitator needs to run during cleaning. The manway door should be removed for manual cleaning.

CIP and vent lines must be protected against freezing. Our standard silos are furnished with Briskheat self-regulating heating cables on the CIP and vent lines (8 watts/LF 120 volt) and covered with Armstrong Armaflex insulation. A pilot light is recommended to make sure that power is being supplied to the heating cable.

It is recommended that the silos be equipped with a high-level cut off on the level system to shut off the filling pump as it is being filled to its rated capacity. A secondary high-level probe through the over-flow/vent line is also suggested in the event of a failure with the level system.

SECTION 5.0 - HORIZONTAL AGITATOR ASSEMBLY (PATENT NO. US 6,193,409 B1)

5.1 Horizontal Agitator Installation Instructions

1. Obtain the parts from the parts box and verify that the quantities and part numbers match the bill of materials.

2. Remove the plastic protective caps, bolt, washer, and square key from the hollow output shaft of the gearmotor. (The loose bolt, washer, and protective caps are not required for assembly; however, the square key must be retained for use on prop shaft assembly.)

! **IMPORTANT: The snap ring inside the gear reducer hollow bore must be installed in the groove at the opposite end from the flange. Snap ring pliers can be used to remove and/or install snap ring. The snap ring is designed as a stop for the agitator shaft. Without the snap ring properly installed, incorrect compression of the spring and improper alignment of the O-rings will occur, which may result in severe damage. If the snap ring is missing, contact Mueller before installing the agitator assembly. DO NOT RUN THE AGITATOR WITHOUT THE SNAP RING IN PLACE. See Step A.**

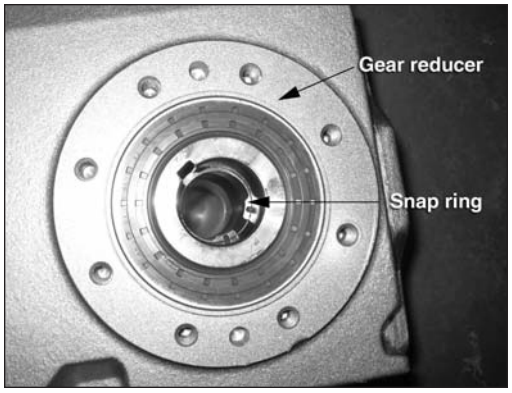

Step A

3. To mount the gearmotor to the housing, insert a cap screw (item 9) into one of the four holes on the flange with the cap end facing away from the gearmotor. Slide the lock washer (item 11) onto the end of the cap screw, and then screw the hex nut (item 10) onto the end over it. Repeat for the other three holes. See Step B.

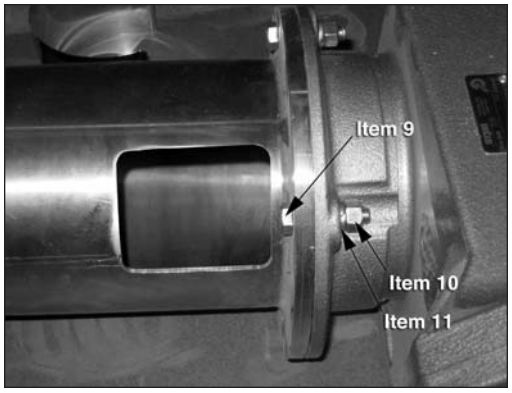

Step B

4. If the agitator assembly kit includes a Eurodrive gearmotor, remove the four plastic plugs from the gear reducer housing around the hollow bore.

5. With the tabs of the cover mounting clip (item 16) parallel to the length of the gearmotor, secure it in place onto the gear reducer with the two cap screws (item 18) and spacers (item 19, only used for Nord gearmotor). See Step C.

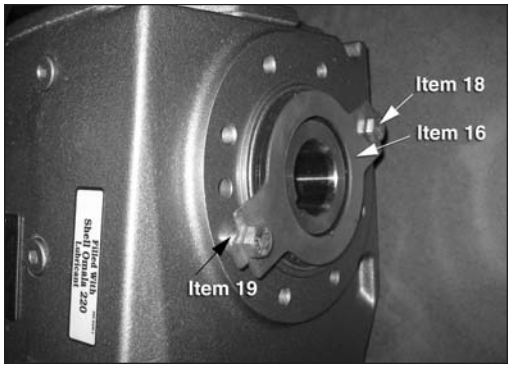

Step C

6. Install one of the O-rings (item 7) in the groove on the agitator shaft closer to the prop, then cover the exposed surface of the O-ring with a thin coating of food-grade lubricant, such as NEVER-SEEZ® White Food Grade or Loctite® Food Grade Anti-Seize. See Step D.

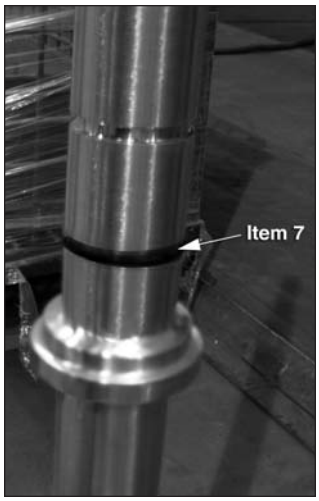

Step D

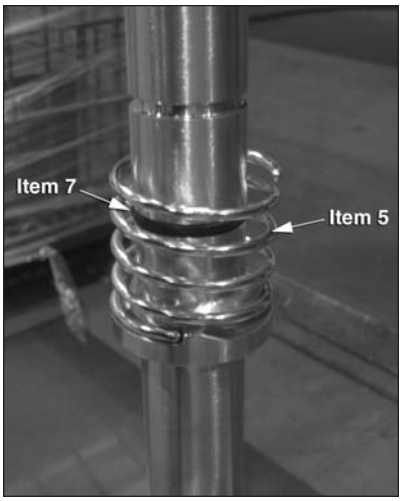

Step E

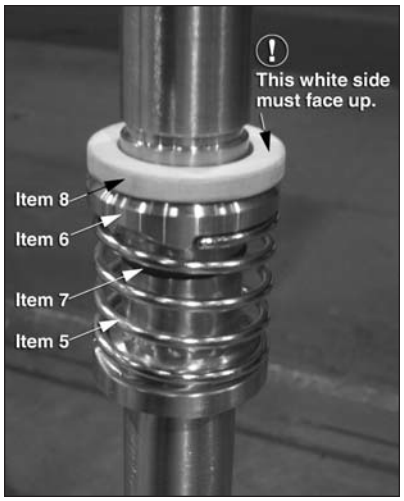

Step F

7. Slide the spring (item 5) onto the shaft, abutting the end of the spring against the outer ledge on the shaft; and follow it with the stainless steel rotary seal (item 6), matching the opposing end of the spring to the ledge on the rotary seal. The gasket seal (item 8) should be slid onto the shaft with the black silicon carbide side facing the rotary seal, resting the gasket seal on the opposing end of the rotary seal to the spring. See Steps E and F.

IMPORTANT: Failure to install the black silicon carbide face of the gasket seal against the stainless steel rotary seal will damage the housing sealing surface. See Step G.

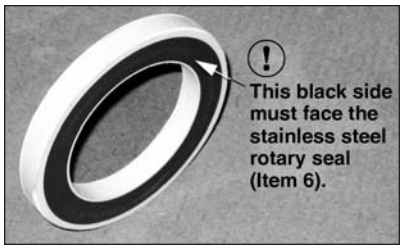

Step G

8. Install the second O-ring in the groove of the agitator shaft further from the prop. (See Section 3.0, "Suggested Routine Maintenance" for more information on this O-ring.) See Step H.

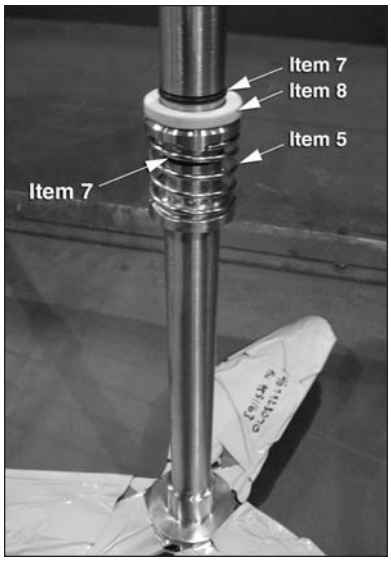

Step H

9. Install the square key in the slot just below the threaded end of the agitator shaft. On the area where the key and agitator shaft will contact the hollow output shaft of the gear reducer, apply a liberal coating of food-grade lubricant, such as NEVER-SEEZ® White Food Grade or Loctite® Food Grade Anti-Seize. See Step I.

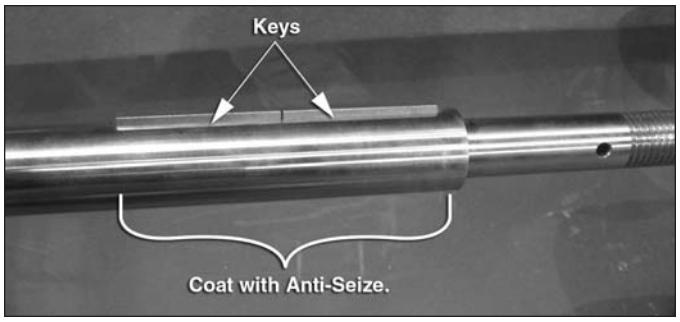

Step I

10. Starting with the entire agitator shaft (Item 4) inside of the tank, slide the threaded end of the agitator shaft through the shell of the tank and into the housing (Item 1), making sure to align the key on the agitator shaft with the key slot on the hollow gearmotor (Item 3) output shaft. Stop pushing the agitator shaft through when the shoulder of the shaft pushes against the snap ring inside the gear reducer. (At this point, the shaft will not be able to be pushed farther without deforming the metal.) See Steps J and K.

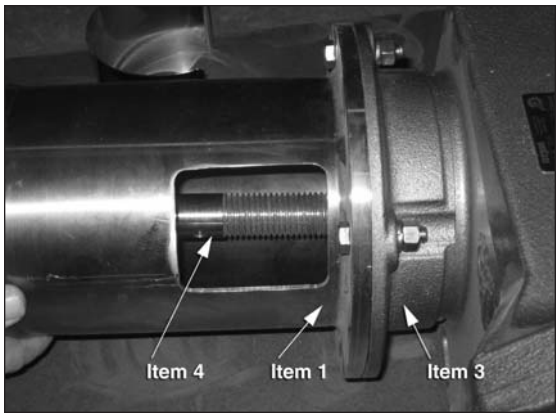

Step J

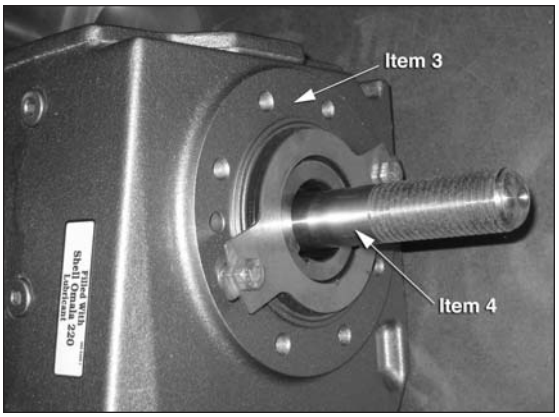

Step K

11. Insert the pin (item 14) into the hole in the side of the threaded end of the shaft. Slide the nylon spacer (item 13) over the shaft and pin to hold the pin in this position. See Steps L and M.

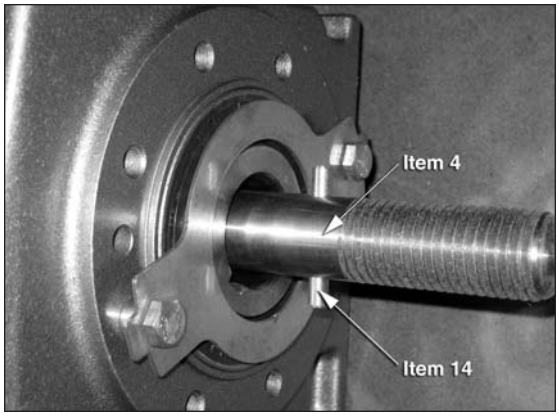

Step L

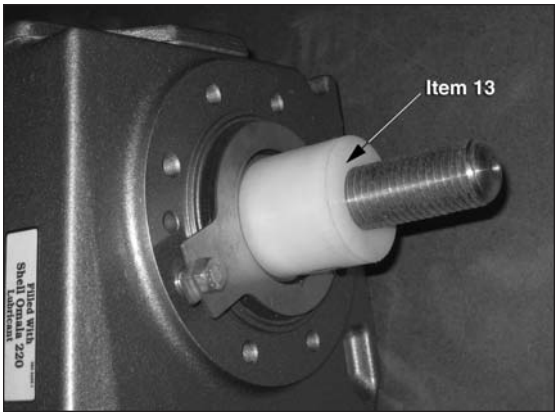

Step M

12. Slide the nylon locking knob (item 12), unthreaded end first, onto the threaded end of the shaft until the shaft comes into contact with the threading on the locking knob. Screw the locking knob onto the shaft until it comes into contact with the nylon spacer. The locking knob must be tightened and kept tight. (A vise grip or channel-lock pliers may be used; however, over-tightening will damage the knob and possibly the seal and/or snap ring as well.) See Step N.

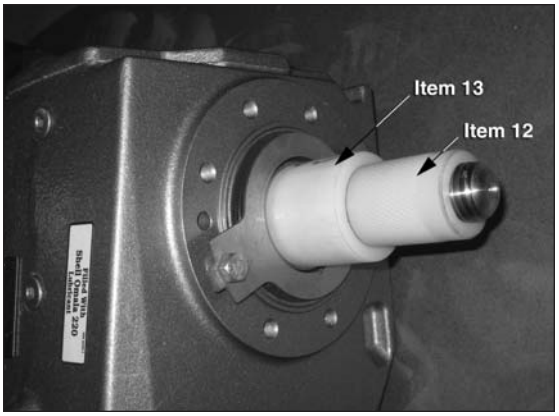

Step N

13. Carefully squeeze the sides of the assembly shield (item 15) and place the assembly shield onto the tabs, aligning the slots of the assembly shield with the tabs of the mounting clip, to fully cover the threading of the agitator shaft and knob. See Step O.

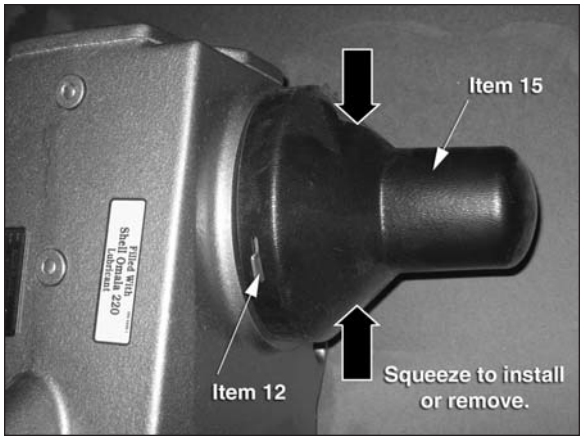

Step O

Step P

14. Place the inspection cover (item 17) over the housing inspection port and snap into place to complete the installation. See Step P.

IMPORTANT: The agitator must not be operated with the prop partially submerged or with the product level within one prop diameter above the agitator. Operating the agitator under these conditions may result in the agitator assembly and/or vessel being severely damaged. See Figure 14.

Figure 14 - Proper Agitator Submersion Level

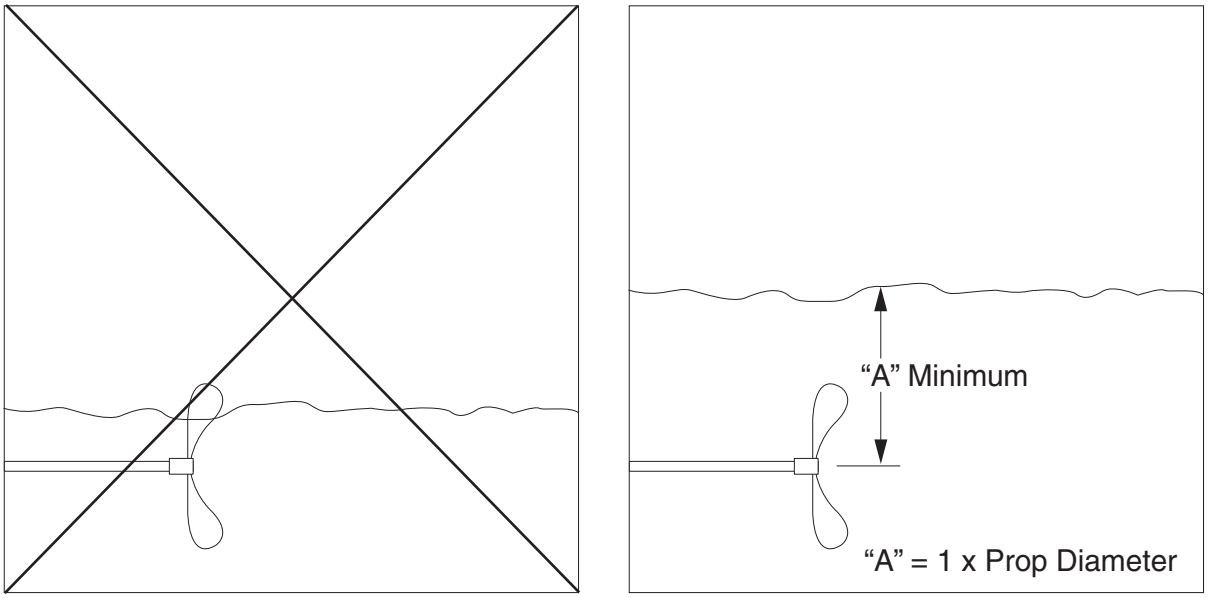

Figure 15 - Horizontal Agitator Assembly Schematic

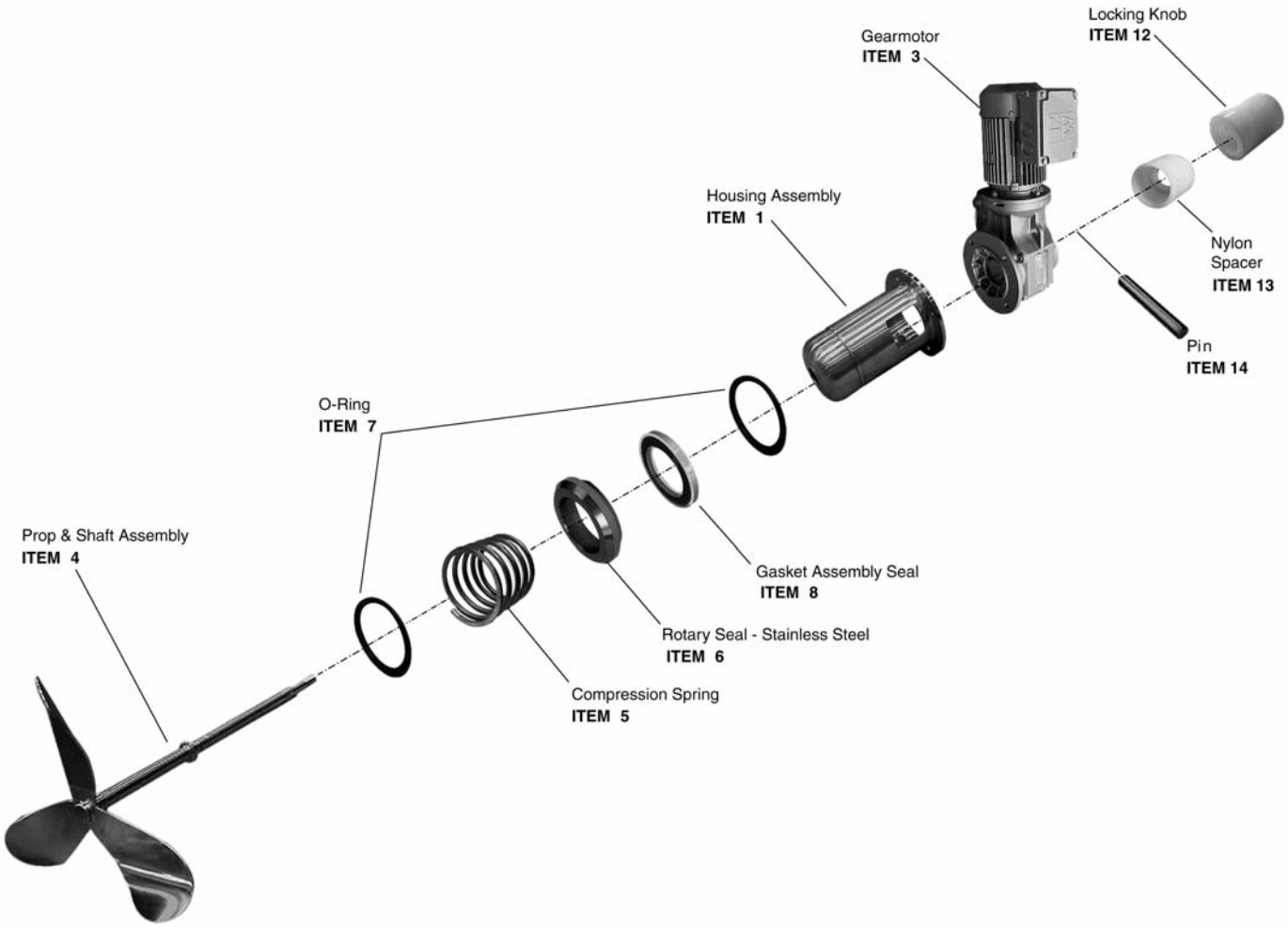

5.2 Suggested Routine Maintenance

NOTE: Refer to Section 5.1, "Horizontal Agitator Installation Instructions" for detailed information when disassembling and/or re-installing agitator assembly.

1. The agitator seal assembly should be inspected periodically and worn or damaged items should be immediately replaced with authentic Mueller spare parts.

IMPORTANT: The inspection frequency is dependent upon operating environment and conditions, cleaning agents and practices, and many other factors beyond the control of Paul Mueller Company. It is the purchaser's responsibility to determine an inspection frequency appropriate for their unique operating conditions.

2. To inspect the stainless steel rotary seal (item 6) and gasket seal (item 8), carefully squeeze the sides of the assembly shield (item 15) to remove it from the tabs of the mounting clip (item 16), loosen the locking knob (item 12) and push the agitator shaft into the tank until the pin (item 14) pushes against the gear reducer; the O-ring (item 7) on the agitator shaft inside the housing will push on the gasket seal and push the seal out of position for inspection and/or replacement.

IMPORTANT: Using any other procedure to remove the gasket seal (item 8) may result in damaging or breaking the seal.

3. Visually inspect the face of the seal housing (item 1) for possible grooves; if the housing face is damaged, contact Mueller Field Service for resurfacing support.

   NOTE: If it is necessary to order replacement parts, please indicate the serial number of the vessel and the type of gear reducer in place.

4. If the gasket seal (item 8) and/or rotary seal (item 6) need to be replaced, it is suggested to change the shaft O-rings (item 7) as well.

5. When installing a new gasket seal, make sure the gasket seal (item 8) is slid onto the shaft with the black silicon carbide side facing the rotary seal (item 6), resting the gasket seal on the opposing end of the rotary seal to the spring.

6. Check to make sure the snap ring inside of the gear reducer hollow bore is installed in the groove at the opposite end from the flange. The snap ring is designed as a stop for the agitator shaft.

IMPORTANT: Without the snap ring properly installed, incorrect compression of the spring and improper alignment of the O-rings will occur, which may result in severe damage. If the snap ring is missing, contact Paul Mueller Company before re-installing the agitator assembly. DO NOT RUN THE AGITATOR WITHOUT THE SNAP RING IN PLACE.

7. Prior to re-installation, lubricate the hollow output shaft of gear reducer, key, and agitator shaft making contact with hollow shaft of gear reducer with a liberal coating of food-grade lubricant, such as NEVER-SEEZ® White Food Grade, Loctite® Food Grade Anti-Seize, etc.

8. The locking knob must be re-tightened and kept tight. (A vise grip or channel-lock pliers may be used; however, over-tightening will damage the knob and possibly the seal and/or snap ring as well.)

5.3 Parts List

Item No.	Picture of Part	Part No.	Description	No. Required
1		9825979	Housing Assembly	1
3	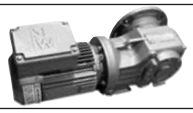	"C"	Gearmotor	1
4		"J"	Prop & Shaft Assembly	1
5		9825993	Compression Spring	1
6		9850421	Rotary Seal, Stainless Steel	1
7		9850414	O-Ring, "Parker"	2
8		9825982	Gasket Assembly Seal	1
9		3200012	Cap Screw	4
10		30532	Hex Nut	4
11		30535	Lock Washer	4
12		9806423	Locking Knob	1
13		9826757	Nylon Spacer	1
14		9826758	Pin	1
15A		9826759	Shield Assembly - Eurodrive	1
15B		9851158	Shield Assembly - Nord	1
16A		9828974	Mounting Clip - Eurodrive	1
16B		9851159	Mounting Clip - Nord	1
17		9828412	Inspection Port Cover	1
18A		9825669	Cap Screw - Eurodrive	2
18B		9851415	Cap Screw - Nord	2
19		9851396	Spacer - Nord	2

Figure 16 - Side Elevation View

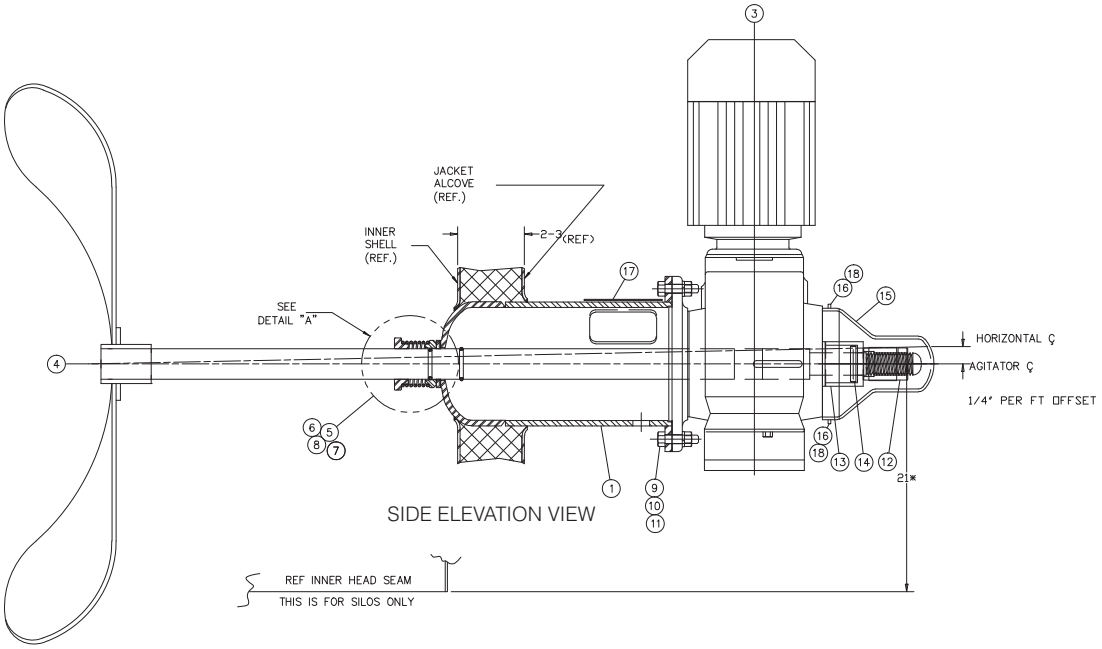

5.4 Bill of Materials

ITEM	QTY	PART NO.	DESCRIPTION
	1	“A”	AGITATOR, HORIZONTAL ASSEMBLY, 1.375" OD W/ “D” HP & “G” RPM
1	1	9825979	HOUSING ASSEMBLY, AGITATOR, 5.0" SCH 40, 10.375" LG 304 S/S
2	1	“B”	AGITATOR COMPONENT, HORIZONTAL, W/O HOUSING “D” HP & “G” RPM 304 S/S
3A	1	“C”	GEARMOTOR, “D” HP, “G” RPM OUTPUT, “H” VOLTAGE, TEFC, EURODRIVE KAF47DT, “F” RATIO, “E” MOTOR RPM, SEVERE DUTY WASHDOWN POS M4A CONDUIT BOX @270°
3B	1	“C”	GEARMOTOR, “D” HP, “G” RPM OUTPUT, “H” VOLTAGE, TEFC, NORD, SK92672AFB, “F” RATIO, “E” MOTOR RPM, SEVERE DUTY WASHDOWN H3 POS TB2 CHI, FLANGE ALT DIA = 7.87" SIDE “A”
4A	1	“J”	PROP & SHAFT ASSEMBLY, EURODRIVE, 1.375" SHAFT, 36.75" LG HORIZONTAL, 304 S/S
4B	1	“J”	PROP & SHAFT ASSEMBLY, NORD, 1.375" SHAFT, 38.0625" LG HORIZONTAL, 304 S/S
5	1	9825993	SPRING, COMPRESSION
6	1	9850421	ROTARY SEAL, 2.125" DIA X .538" 316 S/S
7	2	9850414	O-RING, PARKER, #2-216, NEOPRENE, FDA APPROVED, .139 CROSS SECTION
8	1	9825982	SEAL, GASKET, ASSEMBLY, 1.375" DIA, AGITATOR SHAFT .125" THK, SILICON CARBIDE W/ NEOPRENE, 70-80 DURO BONDED TO OD
9	4	3200012	SCREW, CAP, HH, .375-16NC X 18-8 S/S
10	4	30532	NUT, HEX, 375-16NC, 18-8 S/S, FINISHED
11	4	30535	WASHER, LOCK, .375", 18-8 S/S, MED SPLIT
12	1	9806423	KNOB, LOCKING, AGITATOR, 6/6 NYLON
13	1	9826757	SPACER, HORIZONTAL AGITATOR, 6/6 NYLON
14	1	9826758	PIN, .25" DIA, 1.625" LG, 304 S/S
15A	1	9826759	SHIELD ASSEMBLY, HORIZONTAL AGITATOR, EURODRIVE
15B	1	9851158	SHIELD ASSEMBLY, HORIZONTAL AGITATOR, NORD
16A	1	9828974	CLIP, MOUNTING SHIELD, 16 GA, 304 S/S, EURODRIVE
16B	1	9851159	CLIP, MOUNTING SHIELD, 16 GA, 304 S/S, NORD
17	1	9828412	COVER, INSPECTION PORT, HORIZONTAL AGITATOR, 20 GA, 304 S/S
18A	2	9825669	SCREW, CAP, M8 X 1.25 X 12 MM, LG, 18-8 S/S, EURODRIVE
18B	2	9851415	SCREW, CAP, M8 X 1.25 X 12 MM, LG, 18-8 S/S, NORD
19	2	9851396	SPACER, .5" OD, .3125" LG, NORD

Figure 17 - Detail "A"

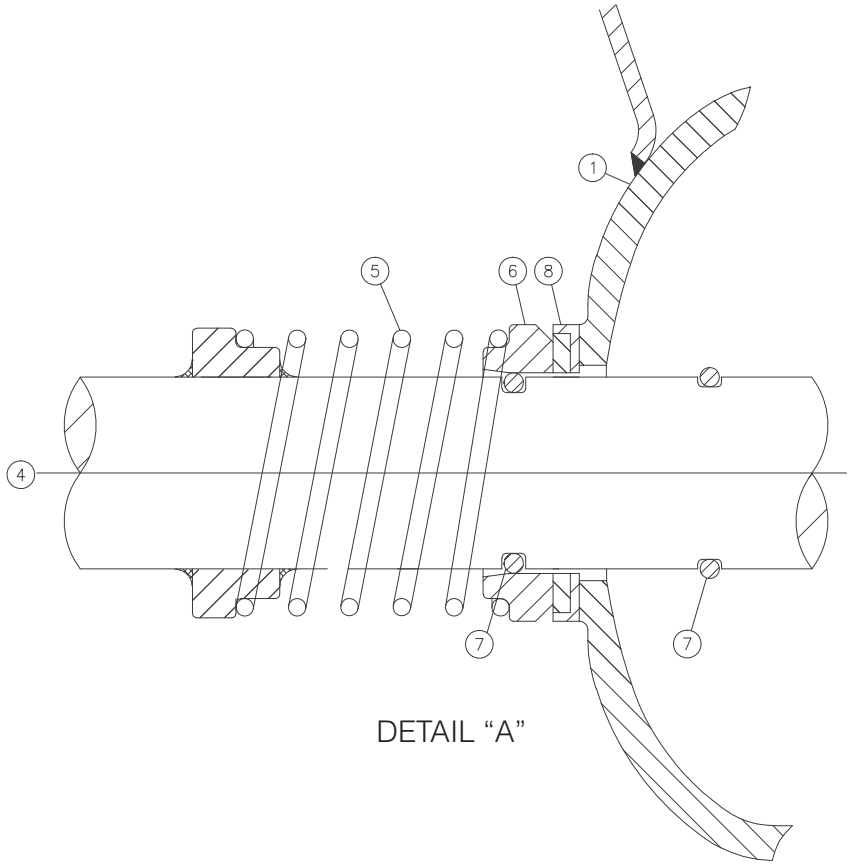

Stock Silo Size	Prop Diameter	A Assembly No.	B Assembly w/o Housing	C Gear Motor	D HP	E Motor RPM	F Ratio	G Output RPM	H Voltage	J Prop & Shaft	
5,000-8,000	23½"	9826775	9826783	9826791	1	1,700	15.86:1	107	3/60/230-460V	9825986	Eurodrive
	23½"	9851157	9851155	9851154	1	1,650	16.08:1	103	3/60/230-460V	9851156	Nord
10,000-15,000	27"	9826776	9826784	9826792	2	1,720	15.86:1	108	3/60/230-460V	9826798	Eurodrive
	27"	9851160	9851161	9851162	2	1,660	16.08:1	103	3/60/230-460V	9851163	Nord
20,000-60,000	23½"	9825981	9825984	9825985	3	1,700	10.56:1	161	3/60/230-460V	9825986	Eurodrive
	23½"	9851164	9851165	9851166	3	1,705	11.02:1	155	3/60/230-460V	9821156	Nord

6.1 Flooded Ammonia System

These controls, if ordered with the tank, will consist of an evaporator pressure regulator with strainer, pressure gauge, ASME surge drum, liquid solenoid valve with strainer, level control assembly, pressure relief valve set at 150 psig, liquid drain, and two socket weld flange unions. Refer to Figures 18 through 21. This control system should be installed and connected by qualified refrigeration personnel. See the *ASHRAE Refrigeration Handbook* for standard procedures.

Figure 18 - Flooded Ammonia System Assembly

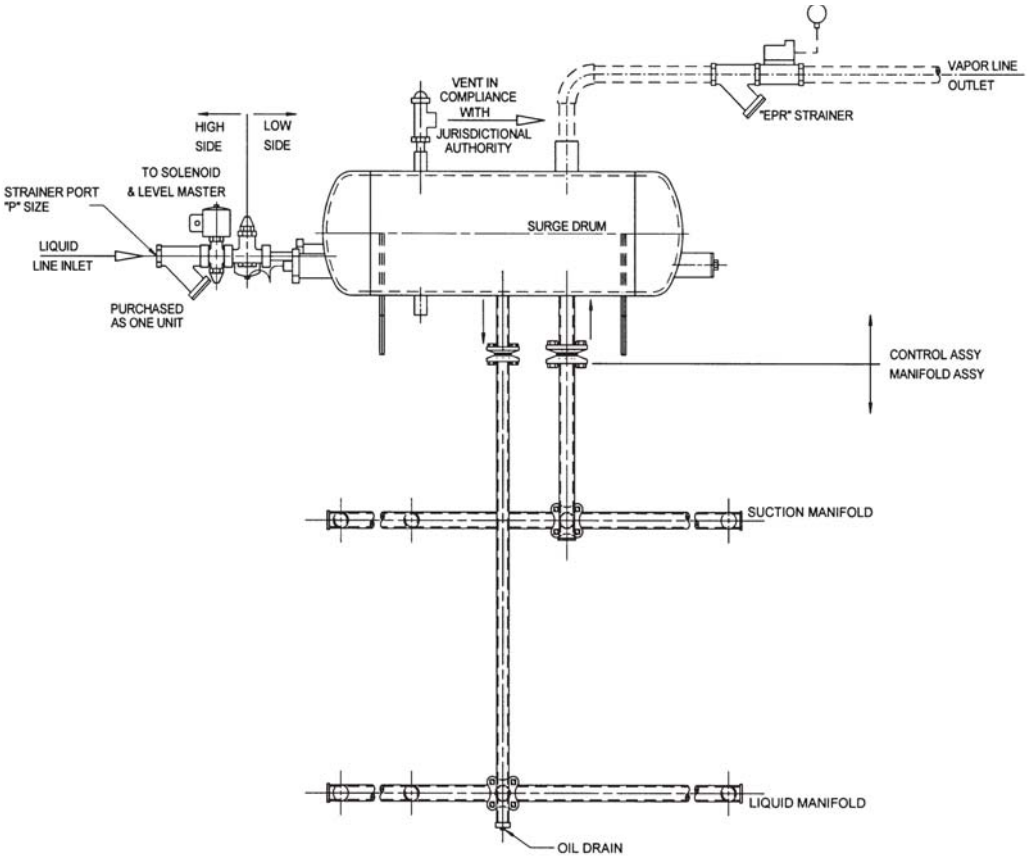

Figure 19 - Typical Union Flange

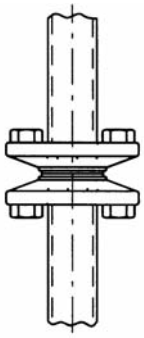

Figure 20 - Wiring Diagram - 240V

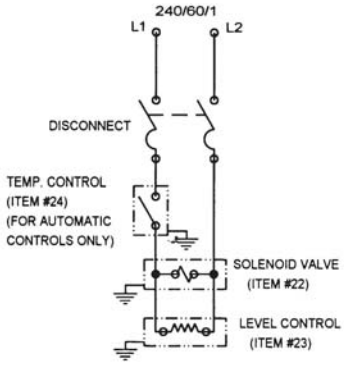

Figure 21 - Wiring Diagram 115V

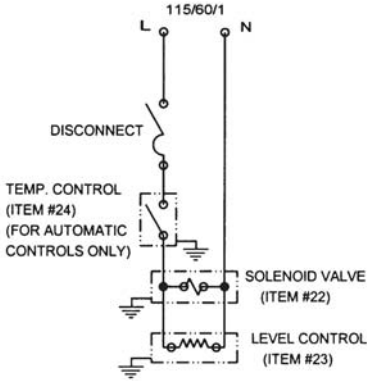

6.2 Direct Expansion (DX) Ammonia Systems

These controls, if ordered with the tank, will consist of an evaporator pressure regulator with strainer, pressure gauge, expansion valve with solenoid valve and strainer, distributor, and pressure relief valve set at 150 psig. Refer to Figures 20 through 22. This control system should be installed and connected by qualified refrigeration personnel. See the *ASHRAE Refrigeration Handbook* for standard procedures.

Figure 22 - Ammonia System Control Assembly

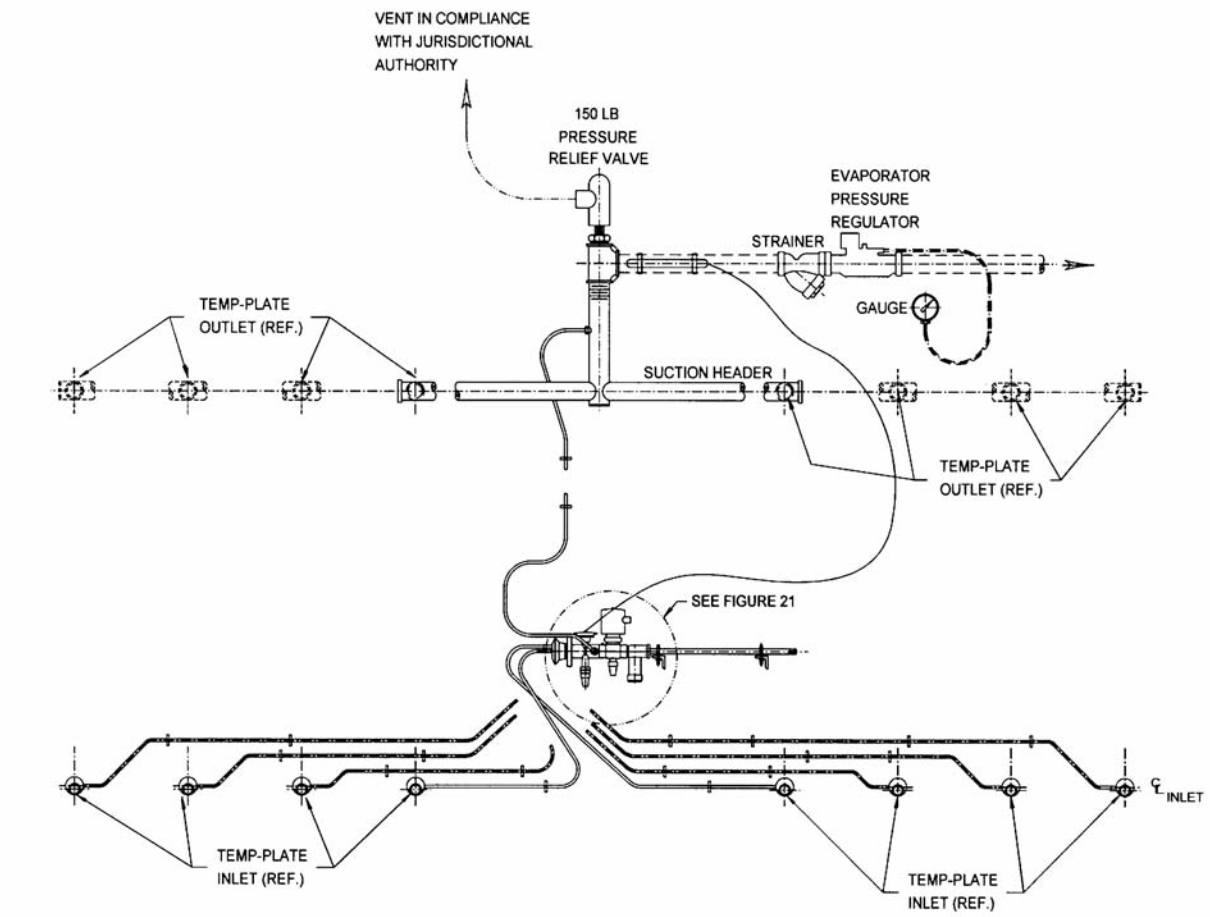

Figure 23 - Ammonia System Valves

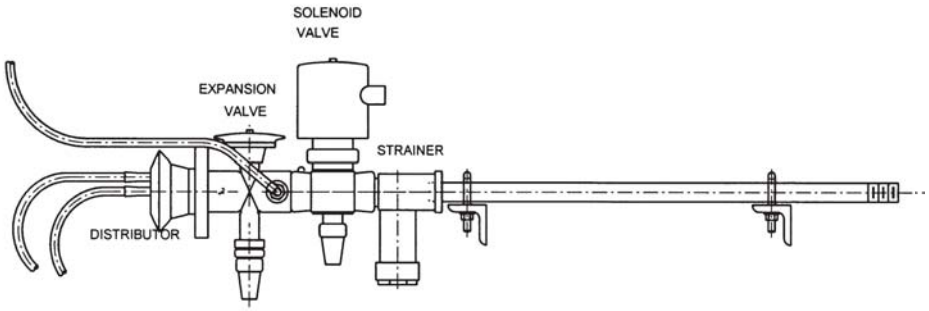

Figure 24 - Wiring Diagram (DX Only)

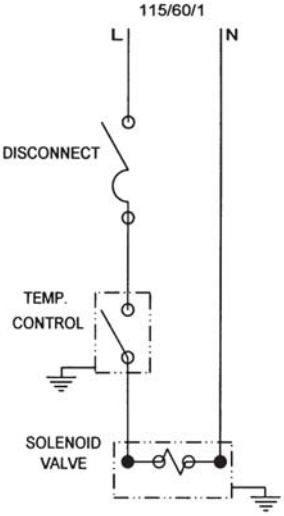

6.3 Flooded or Direct Expansion Halocarbon Refrigerant Systems

Paul Mueller Company's heat transfer surface can be used with flooded or direct expansion (DX) systems. There are numerous ways of connecting and installing these systems. See the *ASHRAE Refrigeration Handbook* for standard procedures. The control system should be installed and connected by qualified refrigeration personnel.

6.4 Refrigerated Water or Glycol Systems

For tanks heated and/or cooled using water or glycol, the inlet connection is the lower connection and the outlet connection is the upper connection. A drain should be installed. Chilled water could freeze in the heat transfer surface jacket during freezing outdoor temperatures. Therefore, it is important to completely drain water from the heat transfer jacket when product is not held in the tank during cold weather. All exposed piping should be insulated up to the tank. A pressure relief valve must be installed at the inlet in order not to exceed the design pressure of the heat transfer jacket.

SECTION 7.0 - OPERATION CHECKLIST

- ❑ Heating cables must be connected if threat of freezing exists.
- ❑ High-level cut off must be in place.
- ❑ The manway door must be open during CIP.
- ❑ All covers are sealed before running the agitator.
- ❑ Agitator rotation is clockwise as viewed from the alcove.
- ❑ Product level is one prop diameter above the center of the shaft. Refer to Figure 16 for prop diameter.
- ❑ Water is not left in the jacket during freezing conditions.
- ❑ Exposed piping is insulated.
- ❑ Silo is not left in soiled condition.
- ❑ Agitator has been disassembled, inspected, lubricated, and properly reassembled per Section 5.1 and Figure 14.

SECTION 8.0 - GENERAL CARE AND CLEANING OF STAINLESS STEEL

8.1 Overview

All metal product contact surfaces of this equipment are manufactured from one of the 300 series stainless steels. The 300 series alloys are easy to clean and maintain, and are the leading choice for use with most foods and similar products.

8.2 Properties of Stainless Steel

Stainless steel is a somewhat generic term used to describe a family of steel products related by their chemical composition and characterized by their resistance to rust and corrosion. The types and grades of stainless steel range from multi-purpose architectural materials to the highly specialized alloys used in pharmaceutical, chemical, and aerospace manufacturing.

Though viewed in many processes as nearly indestructible, stainless steel possesses some very specific limitations. Probably the most noted intolerance is to halogen (chlorine/fluorine) compounds. Stainless steel is extremely vulnerable to damage by certain salts and chlorine solutions. Concentration, exposure time, and temperature are all critical factors that impact material resilience. Small increases in any of these factors can cause damage in a short time if the process is operating near the material limits.

Typically, however, stainless steel is resistant to discoloration and attack under conditions that soon cause other metals to deteriorate. This durability results from a thin film of protective oxide that forms naturally on the metal surface. By following a few guidelines to protect this oxide layer, the surface will remain durable and bright for the service life of the product.

8.3 Use and Cleaning of Stainless Steel

Proper use, cleaning, and maintenance are essential to maintain the integrity and serviceability of stainless steel vessels. If proper cleaning and maintenance procedures are not followed, the protective oxide film can break down—exposing base metal to the effects of contamination and corrosion.

Care of the vessel begins with avoiding surface damage. For example, the improper use of bactericides, such as those containing more than 200 PPM chlorine, can initiate pitting and corrosion.

A. Suggestions to Avoid Surface Damage

- Do not allow contact with (non-stainless) steel wool, wrenches, or fittings. Contact under either wet or dry conditions can trigger surface attack.
- Do not allow deposits of foreign matter of any kind to remain on the surface for more than a few hours at any one time.
- Do not allow pails, tools, or wet objects to lie on the surface, even overnight.
- Do not enter the vessel with shoes. At a minimum, use protective cloth shoe covers.
- Do not scratch or abrade the surface with files, steel wool, coarse sandpaper, or emery cloth. Stainless steel sponges (available at most hardware stores) may be used to remove deposits.
- Follow manufacturers' directions when using detergents or sanitizing compounds. Using higher than recommended concentrations may dull or corrode the surface.
- Never put concentrated detergents or sanitizing compounds into an empty tank — add water first.

- Do not allow cleaning or sanitizing solutions to remain in the vessel for more than 20 minutes.
- Avoid splashing cleaning or sanitizing solutions in a manner that would allow solutions to dry or concentrate on the surface.
- Do not allow water to evaporate in the vessel. Most waters will leave behind salt or scale that may stain the surface. Drain completely.
- Do not apply pressure to the vessel unless it is designed for pressure service.

Beyond avoiding specific sources of damage, cleaning is the next most important task in maintaining a stainless vessel. The basic cleaning procedure outlined below is adequate for many processes. Your process may require a more extensive procedure than the steps shown here.

B. Suggested Cleaning and Bactericidal Treatment

Mueller silos are CIP-able, but the manway gasket, vent screens, and sample valve should be removed for COP.

1. Properly vent the tank, ensuring that vent assemblies and manway CIP door are in place and unobstructed.

IMPORTANT: Failure to properly vent the tank will result in rupture or collapse of the tank due to rapid expansion and contraction of air in the tank as temperature cycles change.

2. Rinse out solids, foam, and other residue with cold water immediately after product is removed.

3. Rinse with warm water to bring the stainless steel surfaces up to temperature before washing.

4. Use the amount of cleaner recommended by the manufacturer. Circulate the cleaning solution at the temperature and time recommended by the manufacturer.

SAFETY/ALERT: If using a chlorinated cleaner, be certain that the product is drained and that no chlorine residue remains in the tank before introducing products containing acid, ammonia, or other chemicals. The product of such a mixture can be deadly and extremely corrosive.

5. Rinse with warm water followed by tepid or cold water.

6. If sanitizing, be certain not to exceed the manufacturer's recommended concentration for stainless steel equipment. Typical sanitizing products containing chemicals such as chlorine and iodine are potentially corrosive depending on exposure time, temperature, and concentration.

SAFETY/ALERT: If using a chlorinated sanitizer, be certain that the product is drained and that no chlorine residue remains in the tank before introducing products containing acid, ammonia, or other chemicals. The product of such a mixture can be deadly and extremely corrosive.

7. Sanitize immediately before product enters the tank. Do not close the tank for empty storage with wet sanitizing solution on the stainless steel surface.

C. Surface Passivation

Passivation is a term used to describe the formation of the protective oxide layer on the surface of stainless steel. Stainless steel is actually self-passivating. Left alone, clean stainless steel in contact with air will form an oxide layer within a couple of days. In most instances though, the term passivation implies the use of a chemical process to clean the surface and induce oxide formation.

Chemical passivation is rarely needed in processes where the vessel material has been properly matched to the product and where cleaning procedures are maintained. The exceptions include situations involving mechanical damage, improper cleaning, welding repair, visible corrosion, or when contaminants (like iron from steel) have been embedded in the surface. The observable symptoms may include rust, pitting, or severe discoloration. In these instances, the natural passivation process may be prevented or occur too slowly for practical needs.

If you feel chemical passivation may be necessary, but do not have internal resources available, check with your local industrial chemical supplier. Many local suppliers offer this service and they are generally the preferred source. If you are unable to locate a service, please call the Mueller Service Department for information.

P.O. Box 828 • Springfield, Missouri 65801-0828, U.S.A.
Phone: (417) 575-9000 • 1-800-MUELLER • Fax: (417) 575-9669
www.muel.com • E-mail: processing@muel.com

DP-145-8/9825887